MAYTONI
DECORATIVE LIGHTING

Pendant lamp Colline

Series: Colline Article: MOD083PL-09CH

PROPERTIES

Lamp type: ..... Pendant lamp
Height, mm: 980
Min Height, mm: 250
Max Height, mm: 980
Bulbs: ..... (40W)
Diameter, mm: 800
Ceiling mount type: ..... Plank
Chain length, mm: 800

ADDITIONAL
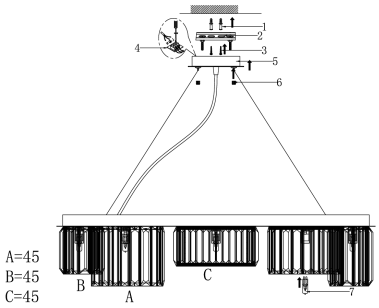
Light Socket: G9
Lamp power: 40
VOLTAGE: ..... AC220_240
Base material: ..... Stainless steel
2in1: ..... No
LED: ..... No
Bulbs incl.: ..... No
Barcode: 4251110052588
IP: IP20
Package volume, m3: 0.205216
Net weight, kg: 16.22
Warranty: 2