MAYTONI
DECORATIVE LIGHTING

Wall lamp Palace

Series: Palace Article: DIA890-WL-01-G

PROPERTIES

Lamp type: ..... Wall lamp
Height, mm: 184
Min Height, mm: 184
Max Height, mm: 184
Bulbs: ..... (60W)

ADDITIONAL
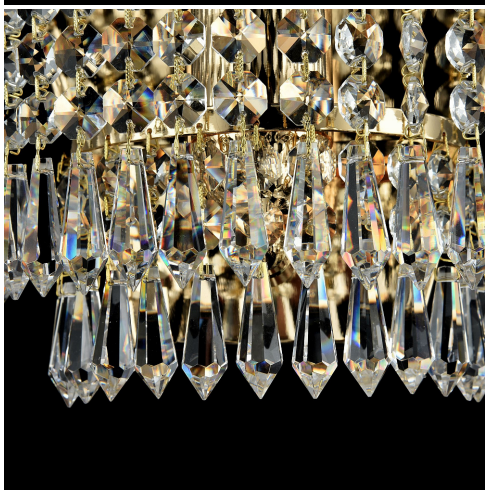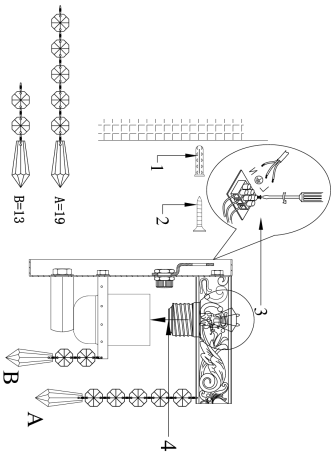
Light Socket: E27
Lamp power: 60
VOLTAGE: ..... AC220_240
Width, mm: 170
Base material: ..... Metal
2in1: ..... No
LED: ..... No
Length, mm: 119
Bulbs incl.: ..... No
Barcode: 4251110012520
IP: IP20
Package volume, m3: 0.013613
Net weight, kg: 0.84
Place type: ..... Living room
Warranty: 2