MAYTONI
DECORATIVE LIGHTING

Ceiling lamp Conik gyps

Series: Conik gyps Article: C002CW-01W

PROPERTIES

Lamp type: ..... Ceiling lamp
Height, mm: 135
Bulbs: ..... (30W)

ADDITIONAL
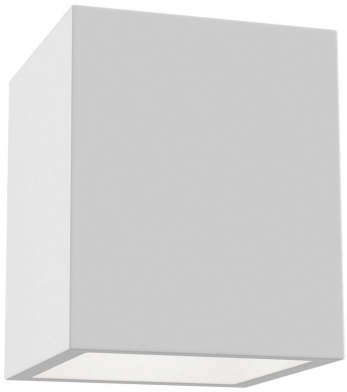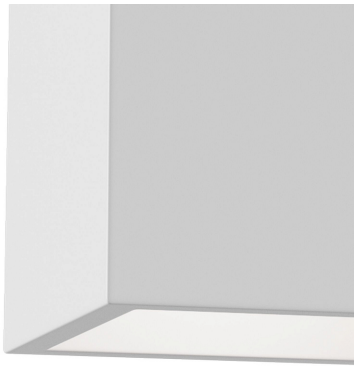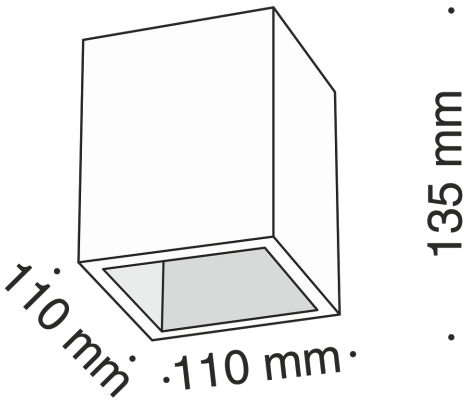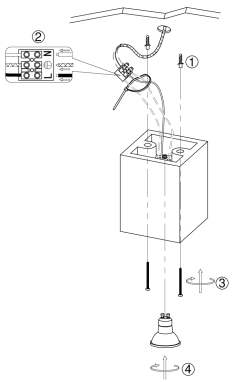
Lamp power: 30
VOLTAGE: ..... AC220_240
IP: IP20
Light Socket: GU10
Width, mm: 110
Base material: ..... Gypsum
2in1: ..... No
LED: ..... No
Length, mm: 110
Bulbs incl.: ..... No
Barcode: 4251110020457
Package volume, m3: 0.000468
Net weight, kg: 1.25
Place type: ..... Ballroom
Warranty: 2