MAYTONI
DECORATIVE LIGHTING

Downlight Gyps Modern

Series: Gyps Modern Article: DL001-1-01-W

PROPERTIES

Lamp type: ..... Downlight
Height, mm: 60
Bulbs: ..... (35W)

ADDITIONAL
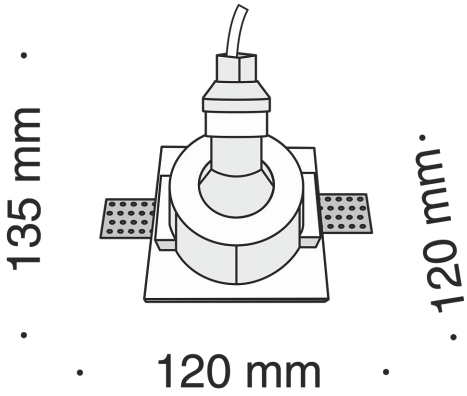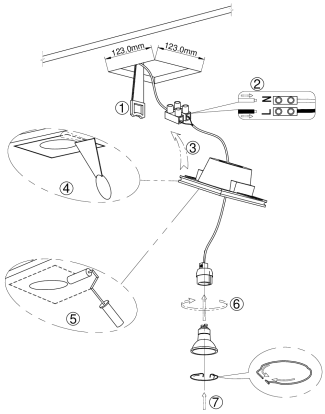
Lamp power: 35
VOLTAGE: ..... AC220_240
IP: IP20
Light Socket: GU10
Width, mm: 120
Base material: ..... Gypsum
2in1: ..... No
LED: ..... No
Length, mm: 120
Bulbs incl.: ..... No
Build-in Depth : 110
Barcode: 4251110012797
Package volume, m3: 0.000252
Net weight, kg: 0.55
Place type: ..... Living room
Warranty: 2