MAYTONI
DECORATIVE LIGHTING

Downlight Gyps Modern

Series: Gyps Modern Article: DL002-1-01-W

PROPERTIES

Lamp type: ..... Downlight
Height, mm: 70
Bulbs: ..... (35W)
Diameter, mm: 130

ADDITIONAL
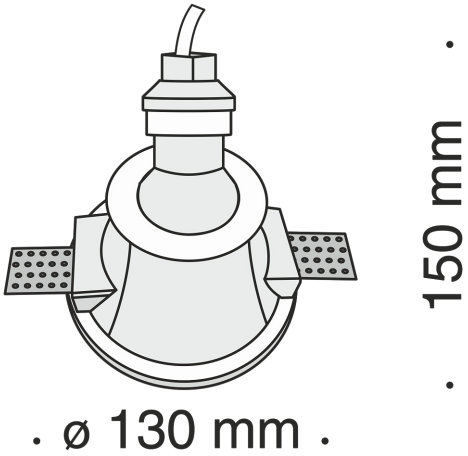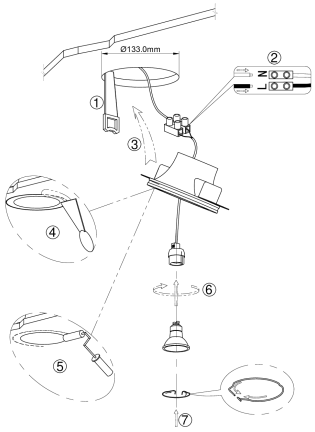
Lamp power: 35
VOLTAGE: ..... AC220_240
IP: IP20
Light Socket: GU10
Base material: ..... Gypsum
2in1: ..... No
LED: ..... No
Bulbs incl.: ..... No
Cutting hole diameter : 133
Build-in Depth : 130
Barcode: 4251110012803
Package volume, m3: 0.000249
Net weight, kg: 0.51
Place type: ..... Living room
Warranty: 2